TABLE OF CONTENTS

0.1 Circulation List

0.2 Amendment Record

FOREWORD

1. SCOPE
2. REFERENCES
3. TERMS AND DEFINITIONS
4. REQUIREMENTS
5. TESTS AND INSPECTION
6. MARKING AND PACKING
7. DOCUMTATION

ANNEX A: SHEDULE OF GUARANTEED TECHNICAL PARTICULARS FOR OFFERED FASTENERS AND WASHERS

(to be filled and signed by the Manufacturer and submitted together with relevant copies of the Manufacturer's catalogues, brochures, drawings, technical data & calculations, sales records for past five years, four customer reference letters, details of manufacturing capacity, the manufacturer's experience and copies of complete type test reports and accreditation certificate to ISO/IEC 17025 for the third party testing laboratory for tender evaluation, all in English Language)

0.1 Circulation List

COPY NO.	COPY HOLDER
1	Manager, Standards
Electronic copy (pdf) on Kenya Power server: (http://172.16.1.40/dms/browse.php?fFolderId=23)	

0.2 Amendment Record

Rev No.	Date (YYYY-MM-DD)	Description of Change	Prepared by (Name & Signature)	Approved by (Name & Signature)
Issue 2	2014-04-06	Cancels and replaces Issue 1 Revision 2 of 2010-08-11	Michael Apudo	George Owuor
Issue 2 Rev 1	2015-09-17	Remove 112mm pole bolt from table 4A and alignment to BS 4190. Replace the 100mm assembly bolt with 110mm assembly bolt to suit the 4½" x ⅝" bolt Revise Fig. 3b: Square (curved) washer Revision of GTP	M. Apudo J. Ng'ang'a	Dr. Eng. Peter Kimemia

FOREWORD

This specification has been prepared by the Standards Department of the Kenya Power & Lighting Company Ltd (abbreviated as KPLC) and it lays down requirements for Bolts and Nuts (complete with washers). It is intended for use by KPLC in purchasing the items.

The supplier shall submit information which confirms satisfactory service experience with products which fall within the scope of this specification

1. SCOPE

1.1. This specification covers the requirements of Bolts and Nuts (complete with washers) for use on overhead power lines and associated structural works. The following items covered in this specification constitute the bolts assembly:

a) Pole Bolts, Nuts and Washers
b) Assembly Bolts, Nuts and Washers
c) Eye Bolts, Nuts and Washers
d) Foundation Bolts, Nuts and Washers
e) Tie Rods (Double and Full Threaded Bolts), Nuts and Washers

1.2. The specification stipulates the minimum requirements for the bolts and nut assembly, acceptable for use on overhead power lines in the company and it shall be the responsibility of the supplier to ensure adequacy of the design, good engineering practice, adherence to the specification and applicable standards and regulations as well as ensuring good workmanship in the manufacture of the items for The Kenya Power & Lighting Company.

1.3. The specification does not purport to include all the necessary provisions of a contract.

2. REFERENCES

The following standards contain provisions which, through reference in this text constitute provisions of this specification. Unless otherwise stated, the latest editions (including amendments) apply.

ISO 898 -1&2: Mechanical properties of fasteners made of carbon steel and alloy steel -Part 1: Bolts, screws and studs with specified property classes - Coarse thread and fine pitch thread.
Part 2: Nuts with specified property classes -- Coarse thread and fine pitch

ISO 7094:	Plain washers with round hole for wood construction
ISO 965-2:	ISO general purpose metric screw threads -- Tolerances -- Part 2: Limits of sizes for general purpose external and internal screw threads -- Medium quality
ISO 262:	ISO general purpose metric screw threads –selected sizes for screws, bolts and nuts.
ISO 68-1:	ISO general purpose screw threads — Part 1: Basic profile
ISO 6157- 1&3:	Fasteners -- Surface discontinuities -- Part 1: Bolts, screws and studs for general requirements; Part 3: Bolts, screws and studs for special requirements
ISO 2859-1:	Sampling procedures for inspection by attributes — Part 1: Sampling schemes indexed by acceptance quality limit (AQL) for lot-by-lot inspection
BS EN 14399 – 1, 3&6:	High-strength structural bolting assemblies for preloading. Part 1: General requirements; Part 3: Hexagon bolt and nut assemblies; Part 6: Plain chamfered washers.
BS 4190:	ISO metric black hexagon bolts, screws and nuts
DIN 436:	Square washers with round hole for wood construction
ISO 1461:	Hot dip galvanized coatings on fabricated iron and steel articles – specifications and test methods

3. TERMS AND DEFINITIONS

For the purpose of this specification, the definitions given in the reference standards shall apply.

4. REQUIREMENTS

4.1. Service Conditions

The Bolts and Nuts shall be suitable for continuous use outdoors in tropical areas at;

a) Altitudes of up to 2200m above sea level,

b) Humidity of up to 90%,
c) Average ambient temperature of +30°C with a minimum of -1°C and a maximum of +40°C and
d) Heavy saline conditions along the coast.

4.2. Design and Construction

4.2.1. General - Bolts

4.2.1.1. All bolts covered in this specification shall be cleanly finished, sound and free from defects in accordance with BS 4190 and BS EN 14399 standards. The surface integrity shall be in accordance with ISO 6157-1 or ISO 6157-3 as appropriate.

4.2.1.2. The mechanical properties shall comply with Table 1 in accordance with ISO 898- 1; with triangular ISO thread in accordance with ISO 68 -1; diameter/pitch combinations in accordance with ISO 262 and thread tolerance class of 6g as per ISO 965-2, for coarse tolerance quality; suitable for hot dip galvanization conforming to ISO 1461.

4.2.1.3. The steel used for the manufacture of the bolts shall conform to the chemical composition limits specified in Table 1 in accordance with ISO 898-1.

4.2.1.4. The bolts shall be formed by cold forging and the required markings shall also be formed (embossed) during the forging operation.

4.2.1.5. The hexagon bolt heads shall be chamfered at an angle of approximately 30^0 on the upper faces. The diameter of the ring shall be formed by the chamfer on the upper face of the bolt and shall not be smaller than 90% of the minimum across flat dimension.

4.2.1.6. The threading shall be formed by rolling process and shall provide the necessary chamfer to the end of the bolt. This end shall be reasonably square with the centre line of the shank.

4.2.1.7. The diameter of the un-threaded portion of the shank of bolts shall be in accordance with the relevant manufacturing standards (BS 4190 / BS EN 14399) and it shall be round and uniform.

4.2.1.8. All bolts shall have a safe working shear stress of not less than 120 N/mm²; the ultimate shear stress shall be 75% of the ultimate tensile strength, the factor of safety shall not be less than 2.5.

4.2.1.9. The bolts, nuts and washers shall be supplied by one manufacturer responsible for the assembly and all components shall be identified with the manufacturer's mark in accordance with BS EN 14399 for assembly bolts and BS 4190 for the rest of the other bolt.

Table 1: Mechanical and chemical properties of bolts

Mechanical and physical properties of bolts			
Property	**Test method**	**Property classes**	
		4.6	**8.8**
Minimum tensile strength, R_m min. MPa	Tensile test for finished fasteners	400	800
Hardness, HV ; F≥98N	Hardness test	250	320-335
Maximum surface hardness, HV 0.3	Carburization test	-	< 30 HV
Maximum decarburized zone, mm	Decarburization test	-	0.015
Reduction of hardness after re-tempering, HV	Re-tempering test	-	20
Surface integrity	Surface discontinuity inspection	To conform to ISO 6157-1	To conform to ISO 6157-3

Limits for the chemical composition of steels						
Property Class	**Material and heat treatment**	**Chemical composition limits (Cast analysis, %)**				**Tempering Temperature^0 C**
		Carbon		**Phosphorus**	**Sulphur**	
		min	**max**	**max**	**max**	
4.6	Carbon steel or carbon steel with additives	-	0.55	0.050	0.060	-
8.8	Carbon steel quenched and tempered	0.25	0.55	0.025	0.025	425

4.2.2. **General – Nuts**

4.2.2.1. The nuts shall also be clean finished, sound and free from defects in accordance with the relevant manufacturing standards (BS 4190 and BS EN 14399) and shall be hot dip galvanized in accordance with ISO 1461 and clause 4.2.3.

4.2.2.2. They shall be finger tight on bolts and will be rejected if they are excessively loose or tight fit.

4.2.2.3. The mechanical properties shall comply with ISO 898-2; with triangular ISO thread in accordance with ISO 68-1; diameter/pitch combinations in accordance with ISO 262 and thread tolerance class of 6H for nuts as per ISO 965-2, for coarse tolerance quality; suitable for hot dip galvanization conforming to ISO 1461.

4.2.2.4. The steel used for the manufacture of the nuts for a particular property class shall conform to the chemical composition limits specified in ISO 898-2 for nuts and as per Table 2.

4.2.2.5. The height and width across flats of the hexagonal nuts shall be as stipulated for style 1 in Table A.3 of ISO 898-2. The property class shall be marked as per ISO 898-2.

4.2.2.6. The nuts shall be chamfered at an angle of approximately 30^0 on one face and they shall be machined on both faces.

Table 2: Mechanical properties and proof loads for nuts as per ISO 898-2

Property class	Nominal Thread diameter	Stress under proof load, Sp; N/mm²	Vickers Hardness		Nut		Proof Load		
			min	max	state	style	Thread pitch mm	Nominal stress area of the mandrel, As, mm²	Proof Load (As x Sp) kN
4	M12	-	-	-	-	-	1.75	84.3	-
	M16	510	117	302	NQT[a]	1	2.0	157.0	
	M20						2.5	245.0	125
	M22						2.5	303.0	154.5
8	M12	880	200	302			1.75	84.3	-
	M16	920	233	353	QT[b]		2.0	157.0	
	M20						2.5	245.0	125
	M22						2.5	303.0	154.5

NOTE: *Minimum hardness is mandatory only for heat-treated nuts and nuts too large to be proof-load tested. For all other nuts, minimum hardness is not mandatory but is provided for guidance only. For nuts which are not hardened and tempered, and which satisfy the proof-load test, minimum hardness shall not be cause for rejection.*

[a] - NQT = Not quenched or tempered.
[b] - QT = Quenched and tempered.

Limits for the chemical composition of steels					
Property class	Material and heat treatment	Chemical composition limits (Cast analysis, %)			
		Carbon	Manganese	Phosphorus	Sulphur
		max	min	max	max
4	-	0.50	-	0.060	0.150
8	Hardened and tempered	0.58	0.25	0,060	0.150

4.2.3. Galvanizing

4.2.3.1. All bolts, nuts and washers shall be hot dip galvanized in accordance with ISO 1461.

4.2.3.2. The materials to be galvanized shall be of full dimensions specified and all the burrs sharp edges, scale, oil, paint shall be removed completely before the galvanizing process commences.

4.2.3.3. The galvanizing shall be done through hot dip process (molten Zinc), not less than 98% of which shall be pure Zinc. The process shall be in accordance with ISO 1461.

4.2.3.4. The zinc coating shall be uniform, clean, smooth and as free from spangle as possible. The minimum thickness of coating shall be in accordance with Table 3.

Table 3: Coating thickness

Nominal size and thread diameter	Local coating thickness (minimum) µm	Mean coating thickness (minimum) µm
M10	35	55
M12	35	55
M16	35	45
M20	45	45
M22	45	45

4.3. Specific Requirements

4.3.1. Pole bolts, nuts and washers

4.3.1.1. Pole Bolts

4.3.1.1.1. Pole bolts shall be manufactured in accordance with BS 4190 standard requirements, Property Class 4.6 and as per Fig. 1. Each bolt shall be complete with a nut and two washers - round and square (curved) washers (*as per clauses 4.3.1.2 and 4.3.1.3*).

4.3.1.1.2. The nominal length of the bolts specified (*see Table 4B*) shall be the distance from underside of the head to the extreme end of the shank, including any chamfer or radius. The permissible tolerance on the nominal lengths and finish of the ends shall be in accordance with BS 4190 (*as per Table 4A*).

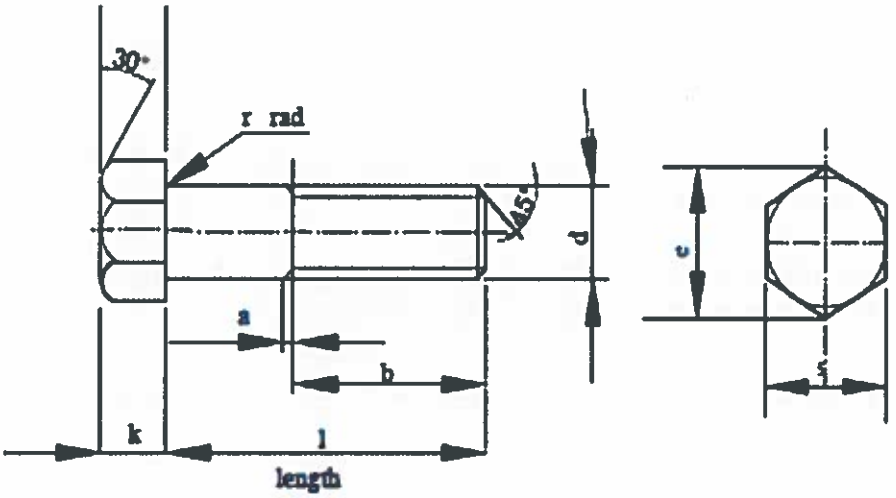

Fig. 1: Pole bolts

Table 4A: Length of threads (Pole bolts) as per BS 4190

Bolt Diameter, mm **D**	Bolt Length, mm **l**	Tolerance on nominal length (mm)	Thread Length, mm, **b**
M16, M20, M22	180	±2.0	150
	220	±2.30	150
	280	±2.60	150
	300*	±2.60	150
	325*	±2.85	150
	350*	±2.85	150
	400*	±3.15	150
Bolts of 300mm to 400mm are not from BS 4190 but as per KPLC code of practice.			

Table 4B: Dimensions of ISO metric black hexagon head bolt

Nominal size and thread diameter (mm) D	Pitch of thread (coarse pitch series) (mm)	Diameter of unthreaded shank (mm) d		Width across flats (mm) s		Width across corners (mm) e		Height of head (mm) k		Radius under head (mm) r
		max	min	max	min	max	min	max	min	max
M12	1.75	12.70	11.30	19.00	18.48	21.90	20.88	8.45	7.55	1.25
M16	2.00	16.70	15.30	24.00	23.16	27.70	26.17	10.45	9.55	1.25
M20	2.50	20.84	19.16	30.00	29.16	34.6	32.95	13.90	12.10	1.78
M22	2.5	22.84	21.16	32.00	31.00	36.9	35.03	14.90	13.10	1.78

4.3.1.2. **Pole Nuts**

4.3.1.2.1. Pole nuts shall be manufactured in accordance with BS 4190 standard requirements, Property Class 4 and as per Fig. 2.

4.3.1.2.2. The nuts shall be marked with an ISO metric letter symbol "M" at the time of manufacture as per BS 4190.

4.3.1.2.3. The bearing surface of un-machined nut shall be square to the axis of the threads within 2^0 and that of machined nut shall be within 1^0.

4.3.1.2.4. The shape and dimensional requirements for pole nuts shall be as per Table 5.

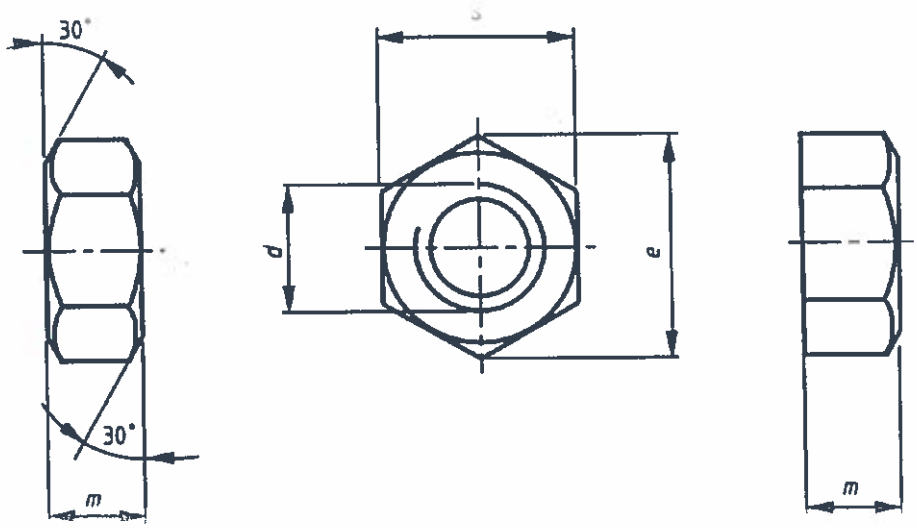

Fig. 2: Dimensions for pole nut

Table 5: Dimensions for Nuts (before galvanizing)

Nominal size and thread diameter	Pitch of thread (coarse pitch series)	Width across flats, 's'		Width across corners, 'e'		Thickness of Nut, 'm'	
		Min.	Max.	Min.	Max.	Min.	Max.
M12	1.75	18.48	19.00	20.88	21.90	9.55	10.45
M16	2	23.16	24.00	26.17	27.70	12.45	13.55
M20	2.5	29.16	30.00	32.95	34.60	15.45	16.55
M22	2.5	31.00	32.00	35.03	36.90	17.45	18.55
All dimensions in mm u.o.s							

4.3.1.3. **Washers**

4.3.1.3.1. Washers shall be of two different shapes - flat round and square (curved) washer.

4.3.1.3.2. The flat round type washers shall be manufactured in accordance with ISO 7094 whereas square (curved) washers shall be in accordance with DIN 436 standard.

4.3.1.3.3. The shape and dimensions shall be as per Fig. 3a & b and Tables 6 and shall be suitable for hot dip galvanizing as per ISO 1461.

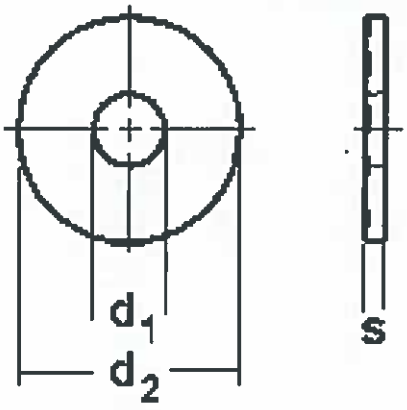

Fig. 3a: Round washer

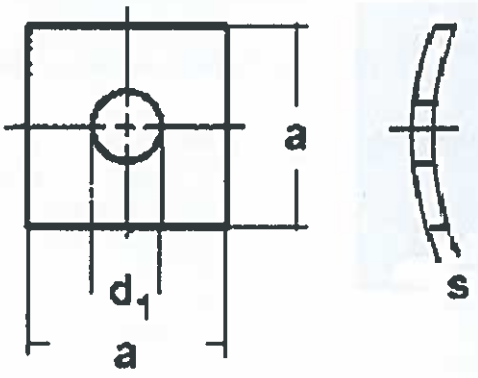

Fig. 3b: Square (curved) washer

Table 6: Dimensions of square and round washers

Nominal size and thread diameter	Round Washers – ISO 7094			Square (curved) Washers – DIN 436		
	d_1 mm	d_2 mm	S mm	d_1 mm	a mm	S mm
M12	13.5	44	4	13.5	40	4
M16	17.5	56	5	17.5	50	5
M20	22	72	6	22.0	60	6
M22	24	80	6	24.0	70	6

4.3.2. Assembly Bolts, nuts and washers

4.3.2.1. Bolts

4.3.2.1.1. The assembly bolts, shall be manufactured and tested in accordance with BS EN 14399, property class 8.8. Each bolt shall be complete with a nut and a washer. (*As per clause 4.3.2.2 and 4.3.2.3 respectively*).

4.3.2.1.2. The finishing/coatings shall be black all over; the dimensions shall be as per Table 7A as per BS EN 14399-3 requirements.

4.3.2.1.3. Assembly bolts design shall be as per Fig. 5 and the required sizes (lengths and nominal diameters) and tolerances as per Table 7B.

Table 7A: Length of assembly bolts

Bolt length, l mm	Tolerance (mm)	Bolt diameter			
		M10 & M12	M16	M20	M22
		Thread length, b (mm)			
38	±1.25	38	38	38	50
50	±1.25	30	38	46	50
75	±1.50	30	38	46	50
110	±1.75	30	38	46	50
140	±2.0	36	44	52	56
180	±2.30	-	44	52	56

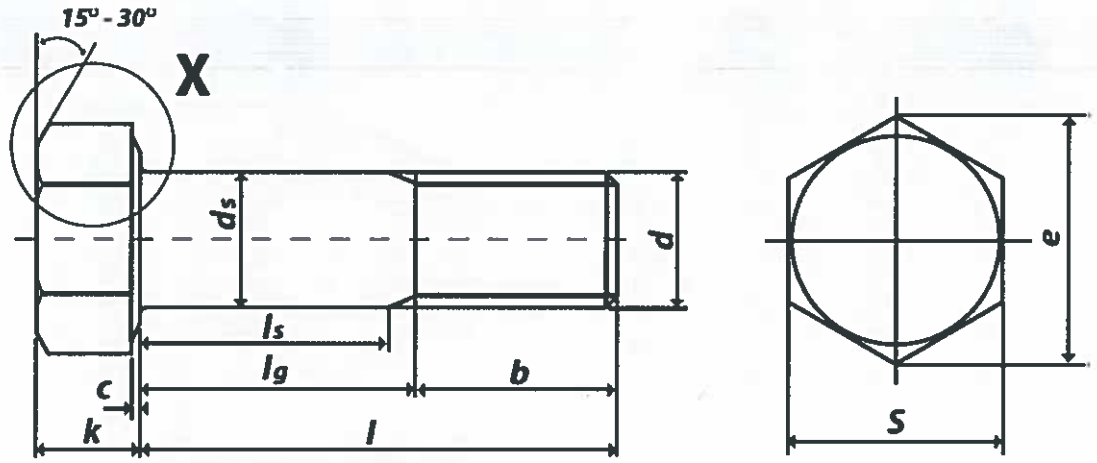

Fig. 5: Assembly bolts

Table 7B: Dimensions for Assembly Bolts (before galvanizing)

Nominal size and thread diameter (mm) d	Pitch of thread (coarse pitch series) (mm)	Diameter of unthreaded shank (mm) d_s		Width across flats (mm) s		Width across corners (mm) e	Height of head (mm) k		Radius under head (mm) r	Depth of washer face (mm) c	
		max	min	max	min	min	max	min	min	max	min
M12	1.75	12.70	11.30	22.0	21.16	23.91	7.95	7.05	1.20	0.80	0.40
M16	2.00	16.70	15.30	27.00	26.16	29.56	10.75	9.25	1.20	0.80	0.40
M20	2.50	20.84	19.16	32.00	31.00	35.03	13.40	11.60	1.50	0.80	0.40
M22	2.50	22.84	21.16	36.00	35.00	39.55	14.90	13.10	1.5	0.80	0.40

4.3.2.2. **Nuts**

4.3.2.2.1. The nuts shall be manufactured and tested in accordance to BS EN 14399-1, property class 8, with the materials and manufacture design as per ISO 898-2 (see *clause 4.3.1.2*).

4.3.2.2.2. The general design and dimensional requirements shall be as per Fig. 6 and Table 8.

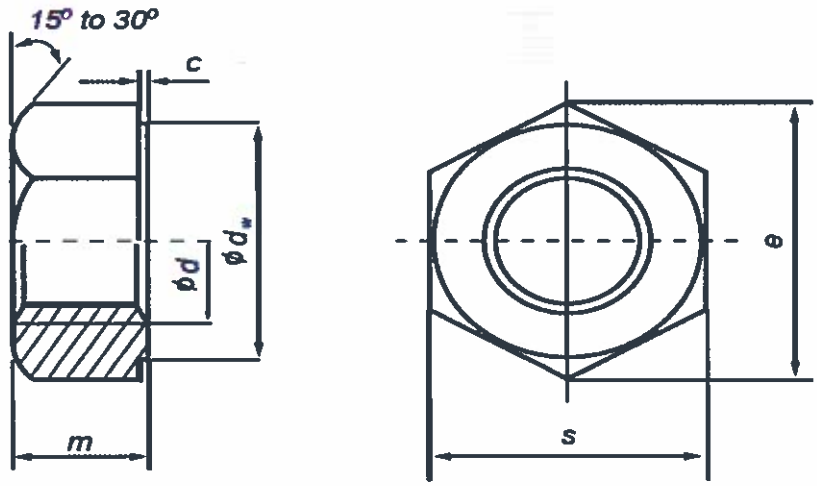

Fig. 6: Assembly nut

Table 8: Dimensions for Nuts (before galvanizing)

Nominal size and thread diameter	Pitch of thread (coarse pitch) (mm)	Width across flats, (mm) 's'		Width across corners, (mm) 'e'	Thickness of Nut, (mm) 'm'		Depth of washer face (mm) "c"	
		min	max	min	min	max	min	max
M12	1.75	21.16	22.00	23.91	10.37	10.80	0.40	0.80
M16	2	26.16	27.00	29.56	14.10	14.8	0.40	0.80
M20	2.5	31.00	32.00	35.03	16.90	18.00	0.40	0.80
M22	2.5	35.00	36.00	39.55	18.10	19.40	0.40	0.80

4.3.2.3. **Washers**

4.3.2.3.1. The washers shall be chamfered, flat round type and shall be manufactured in accordance with BS EN 14399-6 requirements.

4.3.2.3.2. Mechanical properties, dimensions and product marking shall be as per BS EN 14399-6 and they shall be hot dip galvanized to ISO 1461 requirements (*as per clause 4.2.3*).

4.3.2.3.3. The Vickers Hardness (HV) shall be minimum 300 HV and maximum 370 HV for all the nuts.

4.3.2.3.4. The general design and dimensional requirements shall be as per Fig.7 and Table 9.

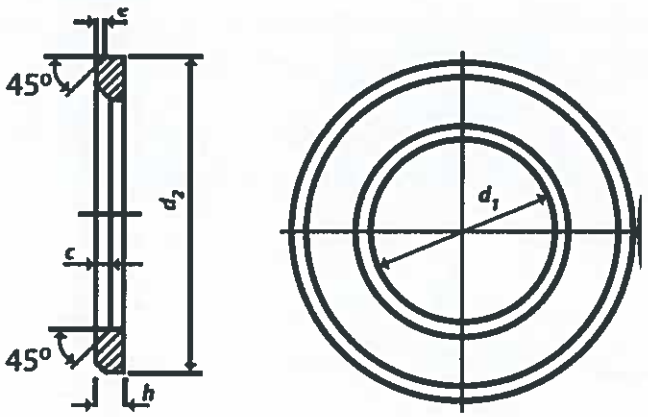

Fig. 7: Assembly washer

Table 9: Dimensions for washers (before galvanizing)

Nominal thread diameter associated bolts	Washer dimensions as per BS EN 14399-6									
	d_1		d_2		h		e		c	
	min	max	min		min	max	min	max	min	max
M12	13.00	13.27	23.48	24.00	2.70	3.30	0.50	1.00	1.600	1.90
M16	17.00	17.27	29.48	30.00	3.70	4.30	0.75	1.50	1.60	1.90
M20	21.00	21.33	36.38	37.00	3.70	4.30	0.75	1.50	2.00	2.50
M22	23.00	23.33	38.38	39.00	3.70	4.30	0.75	1.50	2.00	2.50

4.3.3. Eye bolts, nuts and washers

4.3.3.1. Eye Bolts

4.3.3.1.1. Eye bolts shall be manufactured from steel to BS 4190 strength grade designation 4.6 conforming to property class 4.6.

4.3.3.1.2. The mechanical properties, chemical composition and all the other characteristics shall conform to provisions of clause 4.2.1.

4.3.3.1.3. Each eye bolt shall be supplied as an assembly of bolts, nuts and washers. The characteristics of the nuts and washers are described in clauses 4.2.2 and 4.3.1.3.

4.3.3.1.4. The safe working load of eye bolt in axial direction shall be as per clause 4.2.1.8 of this specification and Table 6 of ISO 898-1 and the factor of safety shall be at least 2.5.

4.3.3.1.5. The bolt shall individually be proof tested in accordance with BS 4190 by the manufacturer to 125 % of its safe working load.

4.3.3.1.6. Eye bolts shall be in accordance with Fig. 8 and with the design properties and dimensional requirements shall be as per Table 10.

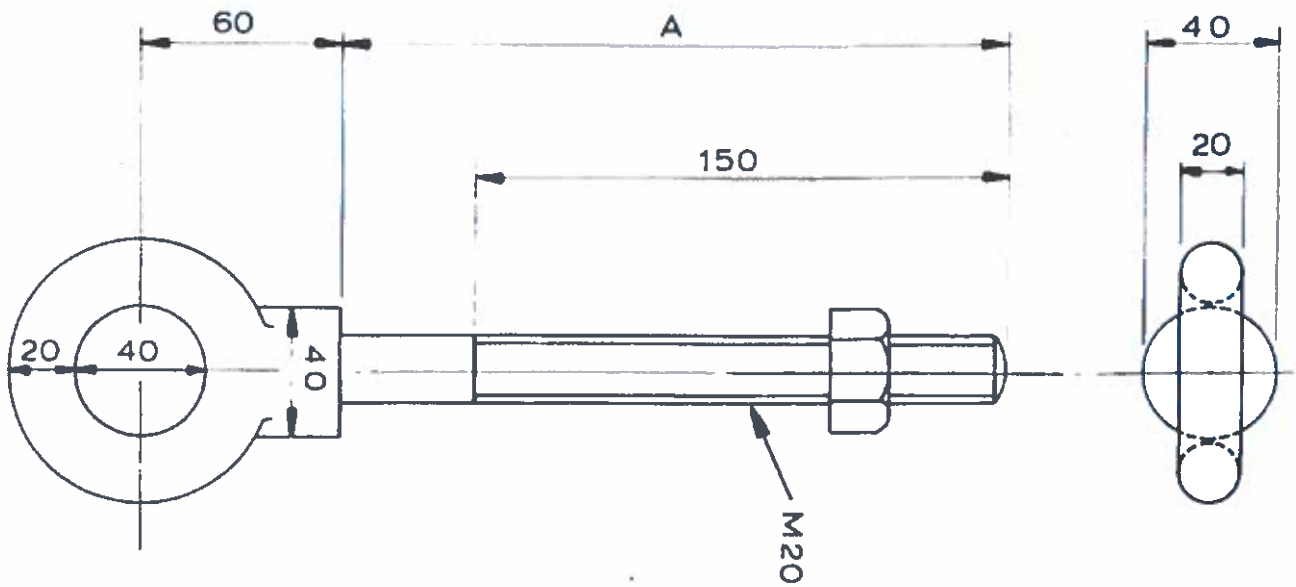

Fig. 8: Eye bolt

Table 10: Dimensions for Eye bolts (before galvanizing)

Nominal thread diameter associated bolts	Length of eye bolt (dimension A as per fig. 1) mm	Length of threads, mm	Diameter of unthreaded part, mm		Pitch of thread (coarse pitch series), mm
			min	max	
M12	250	150	11.30	12.70	1.75
	300				
	325				
M16	350		15.30	16.70	2.0
	400				
	450				
M20	550		19.16	20.84	2.5
	600				
	650				
M22	600		21.16	22.84	2.5
	650				
	700				

4.3.3.2. **Eye Nuts**

4.3.3.2.1. Eye nuts shall be of drop forged manufacture, from steel to BS 4190, property class 4.6.

4.3.3.2.2. Eye nuts shall be in accordance with Fig. 9. The pitch of thread (coarse pitch series) shall conform to those described in clause 4.2.2.3 and shall be compatible with M20 pole bolts and M20 eye bolts detailed in clause 4.3.3 respectively.

4.3.3.2.3. The eye shall be permanently and legibly stamped with the word METRIC in letters not less than 3 mm high.

4.3.3.2.4. The mechanical and chemical properties and proof loads for nuts shall be in accordance with Table 2 of clause 4.2.2.

4.3.3.2.5. The safe working load of eye bolt in axial direction shall be 38.42 kN minimum, the factor of safety being at least 2.5.

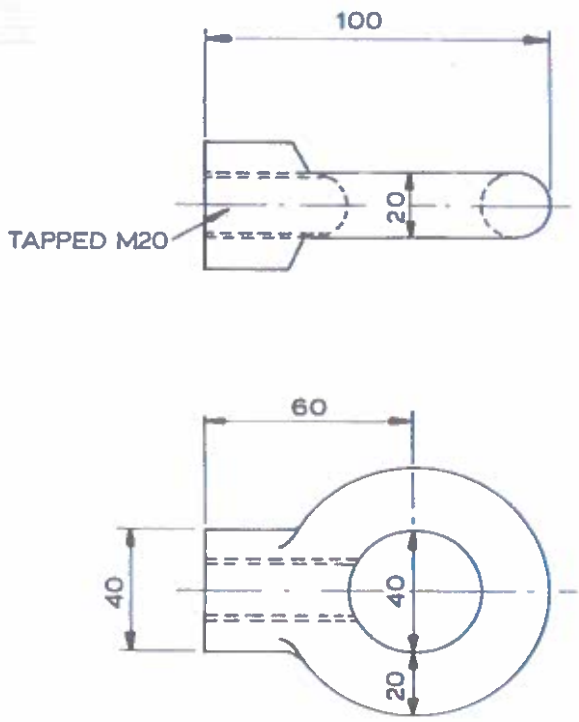

Fig. 9: Eye nut

4.3.4. Foundation bolts, nuts and washers

4.3.4.1. Foundation bolts shall be ISO metric galvanized black hexagon bolts in accordance with BS 4190 grade 8.8 with mechanical and chemical properties as per clause 4.2.2 and Table 1.

4.3.4.2. Each bolt shall be supplied complete with one full nut (*see clause 4.2.2* and flat round washer (*see clause 4.3.1.3*). The nuts shall be to BS 4190 strength grade 8 with all the other properties as per the requirements of clause 4.2.2.

4.3.4.3. The shape of the bolt, nuts and washers shall be as per Fig. 1, 2 and 3a respectively with the dimensions of foundation bolts shall be in accordance with Table 11.

Table 11: Dimensions of foundation bolts.

Length of bolt	Nominal size and thread diameter	Pitch of thread (coarse pitch series)	Diameter of unthreaded shank		Width across flats		Height of head	
			Min.	Max.	Min.	Max.	Min.	Max.
450	M22	2.5	21.16	22.84	31.00	32.00	13.10	14.90
500								
550								
All dimensions in mm u.o.s								

4.3.5. Tie Rods (Double and full threaded bolts), nuts and washers

4.3.5.1. Tie rods (double and full threaded bolts) shall be manufactured from steel to BS 4190 strength grade designation 4.6.

4.3.5.2. Each tie rod shall be supplied complete with four full nuts *(see clause 4.2.2)* and one round washer *(see clause 4.3.1.3)*.

4.3.5.3. Tie rods shall be in accordance with Fig. 10 and have dimensions shown in Table 12.

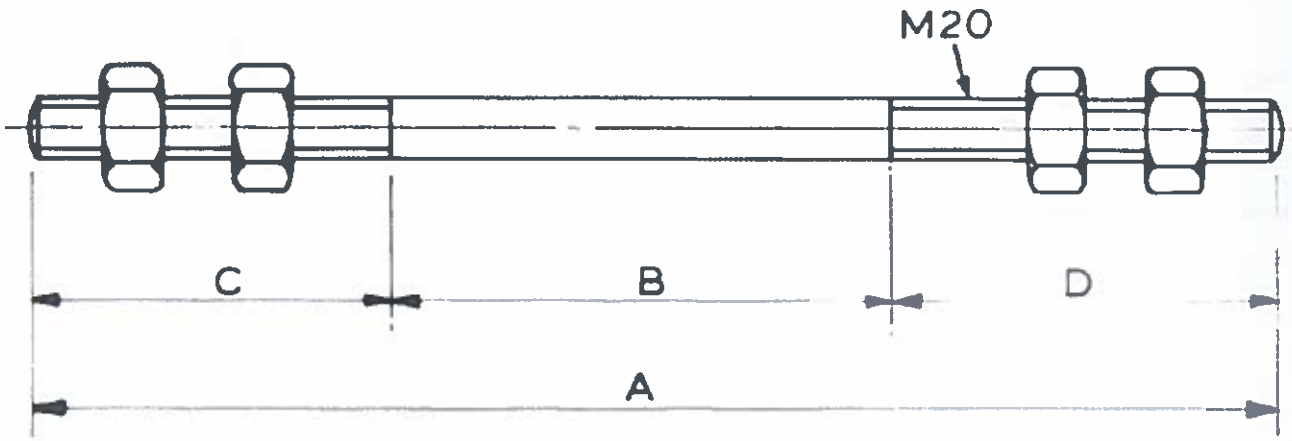

Fig. 10: Tie rod (double and full threaded bolt)

Table 12: Dimensions for Tie Rods (Double and full threaded bolts)

Nominal size and thread diameter	Pitch of thread (coarse pitch series)	Double threaded bolts (dimension as per fig 2)				Full threaded bolts	
		A (length of bolt)	B	C	D	Length of bolt	Length of thread
M20	2.5	450	130	160	160	550mm	550mm
		500	160	170	170		
		550	190	180	180		
		600	200	200	200		
All dimensions in mm u.o.s							

4.4. Sampling

4.4.1. Test specimens shall be selected at random from each inspection lot (or articles) in accordance with ISO 2859-1.

4.4.2. The number of samples selected from each lot shall comply with Table 13 of this specification.

Table 13: Number of test samples

Lot size	Sample size	Lot size	Sample size
25 or less	5	501 to 1,200	80
26 to 50	8	1,201 to 3,200	125
51 to 90	13	3,201 to 10,000	200
91 to 150	20	10,000 to 35,000	315
151 to 280	32	35,001 to over	500
281 to 500	50		

4.5. Quality Management System

4.5.1. The supplier shall submit a quality assurance plan (QAP) that will be used to ensure that the bolts, nuts and washers physical and chemical properties, tests and documentations, will fulfill the requirements stated in the contract documents, standards, specifications and regulations. The QAP shall be based on and include relevant parts to fulfill the requirements of ISO 9001:2008.

4.5.2. The Manufacturer's Declaration of Conformity to applicable standards and copies of quality management certifications including a copy of valid and relevant ISO 9001: 2008 certificate (overseas) or Diamond Mark/Standardization Mark certificate (local); shall be submitted with the tender for evaluation.

4.5.3. The bidder shall indicate the delivery time of the items, manufacturer's monthly & annual production capacity and experience in the production of the type and size of items being offered. A detailed list & contact addresses (including e-mail) of the manufacturer's previous customers for similar type of the bolts, nuts and washers sold in the last five years as well as reference letters from at least four of the customers shall be submitted with the tender for evaluation.

5. TESTS AND INSPECTION

5.1 Bolts, nuts and washers assembly shall be inspected and tested in accordance with BS 4190, BS EN 14399; ISO 898: Part 1 & 2, ISO 965-2, ISO 68-1, ISO 262, ISO 7094, DIN 436, ISO 6157-1&3, ISO 1461, and this specification. It shall be the responsibility of the supplier to perform or to have performed the tests specified and whatever other tests he normally performs at works.

5.2 Copies of previous Type Tests Reports issued by a third party testing laboratory that is accredited to ISO/IEC 17025 shall be submitted with the tender for the purpose of technical evaluation. The accreditation certificate to ISO/IEC 17025 for the same third party testing laboratory used shall also be submitted with the tender document (all in English Language)

5.3 Copies of type test reports to be submitted with the tender (by bidder) for evaluation shall be as stated below:

a) Tensile test for finished fasteners,
b) Hardness test,'
c) Chemical composition of steel – Check Analysis,
d) Carburization test,
e) De-carburization test,
f) Re-tempering test.

5.4. Routine and sample test reports for the bolts, nuts and washers assembly to be supplied shall be submitted to KPLC for approval before shipment/delivery of the goods. KPLC Engineers will witness tests at the factory before shipment.

5.5. Tests to be witnessed by KPLC Engineers at the factory before shipment shall be in accordance with BS 4190, BS EN 14399; ISO 898: Part 1 & 2, ISO 965-2, ISO 68-1, ISO

262, ISO 7094, DIN 436, ISO 6157-1&3, ISO 1461, and this specification and shall include the following:

a) Tensile test for finished fasteners
b) Dimensional checks for finished fasteners
c) Impact tests
d) Proof load test for nuts
e) Galvanization tests
f) Surface discontinuity test.

5.6. On receipt of the goods KPLC may perform any of the tests specified in order to verify compliance with this specification. The supplier shall replace without charge to KPLC the bolts, nuts and washers assembly, which upon examination, test or use; fail to meet any of the requirements in the specification.

6. MARKING AND PACKING

6.1. Marking

6.1.1. Bolts

The following markings shall be embossed on the bolt head (top) during head forging operation and the markings shall not obliterate when galvanizing.

a) Manufacturer's identification marks
b) The diameter of the bolt as per ISO 262.
c) Marking symbols for property classes as per Table 3 of ISO 898 – 1
d) The letters KPLC.

6.1.2. Nuts

Nuts shall be marked with the symbols for property class (*as per clause 9*) of ISO 898-2 and the trade (identification) marking of the manufacturer.

6.1.3. Washers

Washers shall only be marked with the trade (identification) marking of the manufacturer

6.2. Packing

6.2.1. Bolt, nut and washer assembly of each category shall be wrapped in polythene paper before being packed in a gunny bag made of natural fibers (bast or skin fibers) with

higher tensile strength to allow piling one on top of another without damage. The minimum number of the bolt assembly in a package shall be 100.

6.2.2. Each gunny bag shall be clearly marked with the following information:

a) The manufacturer's and/or distributor's identification;
b) Name of country of manufacture;
c) The marking symbol for property class according to Table 19 of ISO 898-1;
d) Size of bolt, nut and washer assembly;
e) Quantity per box;
f) Gross weight of the box;
g) Label **"Property of KPLC".**

7. DOCUMENTATION

7.1. The bidder shall submit its tender complete with technical documents required by Annex A (Guaranteed Technical Particulars) for tender evaluation. The technical documents to be submitted (all in English Language) for tender evaluation shall include the following:

a) Fully filled clause by clause description of the item on offer as per Annex A (Guaranteed Technical Particulars) and signed by the manufacturer;
b) Copies of the Manufacturer's catalogues, brochures, drawings and technical data;
c) Sales records for the last five years and at least four customer reference letters;
d) Details of manufacturing capacity and the manufacturer's experience;
e) Copies of required type test reports by a third party testing laboratory accredited to ISO/IEC 17025;
f) Copy of accreditation certificate to ISO/IEC 17025 for the third party testing laboratory;
g) Manufacturers letter of authorization, ISO 9001:2008 certificate and other technical documents required in the tender.

7.2 The successful bidder (supplier) shall submit the following documents/details to The Kenya Power & Lighting Company for approval before manufacture:

a) Guaranteed Technical Particulars signed by the manufacturer;
b) Design Drawings with details of bolts, nuts and washers to be manufactured for KPLC.
c) Quality assurance plan (QAP) that will be used to ensure that the design, material; workmanship, tests, service capability, maintenance and documentation will fulfill the requirements stated in the contract documents, standards, specifications and regulations. The QAP shall be based on and include relevant parts to fulfill the requirements of ISO 9001:2008
d) Detailed test program to be used during factory testing;

e) Manufacturer's undertaking to ensure adequacy of the design, good engineering practice, adherence to the specification and applicable standards and regulations as well as ensuring good workmanship in the manufacture of the bolts, nuts and washers for The Kenya Power & Lighting Company;
f) Packaging details (including packaging materials).

7.3 The supplier shall submit recommendations for use, care, storage and routine inspection/testing procedures, all in the English Language, during delivery of the bolts, nuts and washers to KPLC stores

---------- SPACE LEFT BLANK ----------

ANNEX A: SHEDULE OF GUARANTEED TECHNICAL PARTICULARS FOR OFFERED FASTENERS AND WASHERS *(to be filled and signed by the Manufacturer and submitted together with relevant copies of the Manufacturer's catalogues, brochures, drawings, technical data & calculations, sales records for past five years, four customer reference letters, details of manufacturing capacity, the manufacturer's experience and copies of complete type test reports and accreditation certificate to ISO/IEC 17025 for the third party testing laboratory for tender evaluation, all in English Language)*

Tender No. .....

KPLC Requirements/Clause			**Bidder's offer** (indicate full details of the values offered)
4.3.1 POLE BOLTS			
Bidders Name & Address			
Manufacturer's name and Country of Origin			
Type designation/ Catalogue Number			
Standards of Manufacture			
General requirements	Bolts	Surface integrity as per ISO 6157- 1	Attach test report
		Triangular ISO thread as per ISO 68-1	
		Thread tolerance of 6g	
		Formed from cold forging	
		Head chamfer angle of 30^0	
		Threading by rolling process	
		Working shear stress of 120N/mm2	Attach test report
		Ultimate tensile stress of 90N/mm2	Attach test report
		Bolts, nuts & washers from one manufacturer	
General requirements	Nuts	Clean finish	
		Finger tight on bolts	

KPLC Requirements/Clause				Bidder's offer (indicate full details of the values offered)
		Triangular ISO thread as per ISO 68-1		Attach test report
		Thread tolerance of 6H		Attach test report
		Chamfer angle of 30^0		
Mechanical and chemical properties	Bolts	Minimum tensile strength, R_m min. MPa		
		Hardness, HV ; F≥98N		
		Surface integrity		
		Carbon steel or carbon steel with additives		
Mechanical properties	Nuts	Stress under proof load Sp; N/ mm^2		
		Vickers hardness		
		Nut state and style		
		Thread pitch (mm)		
		Proof load		
		Chemical composition		
Galvanizing	M10	55µm		
	M12	55µm		
	M16	45µm		
	M20	45µm		
	M22	45µm		
Sizes of pole bolts	M12	Bolt length, mm	112 ± 1.75	
		Thread length, mm	38	
	M16	Bolt length, mm	List	
		Thread length, mm	List	
	M20	Bolt length, mm	List	
		Thread length, mm	List	
	M22	Bolt length, mm	List	
		Thread length, mm	List	
Bolt head dimensions	Provide Drawing			
Pole nuts dimensions	Provide drawing			
Washers dimensions	Provide drawing			

KPLC Requirements/Clause			Bidder's offer (indicate full details of the values offered)
4.3.2 ASSEMBLY BOLTS			
Bidders Name & Address			
Manufacturer's name and Country of Origin			
Type designation/ Catalogue Number			
Standards of Manufacture			
General requirements	Bolts	Surface integrity as per ISO 6157- 3	Attach test report
		Triangular ISO thread as per ISO 68-1	
		Thread tolerance of 6g	
		Formed from cold forging	
		Head chamfer angle of 30^0	
		Threading by rolling process	
		Working shear stress of 120N/mm2	Attach test report
		Ultimate tensile stress of 90N/mm2	Attach test report
		Bolts, nuts & washers from one manufacturer	
General requirements	Nuts	Clean finish	
		Finger tight on bolts	
		Triangular ISO thread as per ISO 68-1	Attach test report
		Thread tolerance of 6H	Attach test report
		Chamfer angle of 30^0	
Mechanical and chemical properties	Bolts	Minimum tensile strength, R_m min. MPa	
		Hardness, HV ; F≥98N	
		Surface integrity	
		Carbon steel or carbon steel with additives	
Mechanical properties	Nuts	Stress under proof load Sp; N/ mm^2	
		Vickers hardness	
		Nut state and style	
		Thread pitch (mm)	
		Proof load	
		Chemical composition	

KPLC Requirements/Clause				Bidder's offer (indicate full details of the values offered)
Galvanizing	M10	55µm		
	M12	55µm		
	M16	45µm		
	M20	45µm		
	M22	45µm		
Sizes of assembly bolts	M10 & M12	Bolt length, mm	112 ± 1.75	
		Thread length, mm	38	
	M16	Bolt length, mm	List	
		Thread length, mm	List	
	M20	Bolt length, mm	List	
		Thread length, mm	List	
	M22	Bolt length, mm	List	
		Thread length, mm	List	
Bolt head dimensions	Provide Drawing			
Pole nuts dimensions	Provide drawing			
Washers dimensions	Provide drawing			

KPLC Requirements/Clause			Bidder's offer (indicate full details of the values offered)
4.3.3 EYE BOLTS			
Bidders Name & Address			
Manufacturer's name and Country of Origin			
Type designation/ Catalogue Number			
Standards of Manufacture			
General requirements	Bolts	Surface integrity as per ISO 6157- 1	Attach test report
		Triangular ISO thread as per ISO 68-1	
		Thread tolerance of 6g	
		Formed from cold forging	
		Threading by rolling process	
		Working shear stress of 120N/mm2	Attach test report

KPLC Requirements/Clause				Bidder's offer (indicate full details of the values offered)
		Ultimate tensile stress of 150N/mm2		Attach test report
		Bolts, nuts & washers from one manufacturer		
General requirements	Nuts	Clean finish		
		Finger tight on bolts		
		Triangular ISO thread as per ISO 68-1		Attach test report
		Thread tolerance of 6H		Attach test report
		Chamfer angle of 30^0		
Mechanical and chemical properties	Bolts	Minimum tensile strength, R_m min. MPa		
		Hardness, HV ; F≥98N		
		Surface integrity		
		Carbon steel or carbon steel with additives		
Mechanical properties	Nuts	Stress under proof load Sp; N/ mm^2		
		Vickers hardness		
		Nut state and style		
		Thread pitch (mm)		
		Proof load		
		Chemical composition		
Galvanizing	M10	55µm		
	M12	55µm		
	M16	45µm		
	M20	45µm		
	M22	45µm		
Sizes of eye bolts	M12	Bolt length, mm	list	
		Thread length, mm	150	
	M16	Bolt length, mm	List	
		Thread length, mm	150	
	M20	Bolt length, mm	List	
		Thread length, mm	150	
	M22	Bolt length, mm	List	
		Thread length, mm	150	
Bolt head dimensions	Provide Drawing			
Pole nuts dimensions	Provide drawing			

KPLC Requirements/Clause		Bidder's offer (indicate full details of the values offered)
Washers dimensions	Provide drawing	

KPLC Requirements/Clause			Bidder's offer (indicate full details of the values offered)
4.3.4 FOUNDATION BOLTS			
Bidders Name & Address			
Manufacturer's name and Country of Origin			
Type designation/ Catalogue Number			
Standards of Manufacture			
General requirements	Bolts	Surface integrity as per ISO 6157- 3	Attach test report
		Triangular ISO thread as per ISO 68-1	
		Thread tolerance of 6g	
		Formed from cold forging	
		Head chamfer angle of 30^0	
		Threading by rolling process	
		Working shear stress of 120N/mm2	Attach test report
		Ultimate tensile stress of 90N/mm2	Attach test report
		Bolts, nuts & washers from one manufacturer	
General requirements	Nuts	Clean finish	
		Finger tight on bolts	
		Triangular ISO thread as per ISO 68-1	Attach test report
		Thread tolerance of 6H	Attach test report
		Chamfer angle of 30^0	
Mechanical and chemical properties	Bolts	Minimum tensile strength, R_m min. MPa	
		Hardness, HV ; F≥98N	
		Surface integrity	
		Carbon steel or carbon steel with additives	
Mechanical properties	Nuts	Stress under proof load Sp; N/ mm^2	
		Vickers hardness	

KPLC Requirements/Clause				Bidder's offer (indicate full details of the values offered)
		Nut state and style		
		Thread pitch (mm)		
		Proof load		
		Chemical composition		
Galvanizing	M22	45µm		
Size of Foundation bolts	M22	Bolt length, mm	List	
		Thread length, mm	List	
Bolt head dimensions	Provide Drawing			
Pole nuts dimensions	Provide drawing			
Washers dimensions	Provide drawing			

KPLC Requirements /Clause			Bidder's offer (indicate full details of the values offered)
4.3.5 TIE RODS			
Bidders Name & Address			
Manufacturer's name and Country of Origin			
Type designation/ Catalogue Number			
Standards of Manufacture			
General requirements	Bolts	Surface integrity as per ISO 6157- 1	Attach test report
		Triangular ISO thread as per ISO 68-1	
		Thread tolerance of 6g	
		Formed from cold forging	
		Head chamfer angle of 30^0	
		Threading by rolling process	
		Working shear stress of 120N/mm2	Attach test report
		Ultimate tensile stress of 90N/mm2	Attach test report
		Bolts, nuts & washers from one manufacturer	
General requirements	Nuts	Clean finish	
		Finger tight on bolts	
		Triangular ISO thread as per ISO 68-1	Attach test report

KPLC Requirements /Clause				Bidder's offer (indicate full details of the values offered)
		Thread tolerance of 6H		Attach test report
		Chamfer angle of 30^0		
Mechanical and chemical properties	Bolts	Minimum tensile strength, R_m min. MPa		
		Hardness, HV ; F≥98N		
		Surface integrity		
		Carbon steel or carbon steel with additives		
Mechanical properties	Nuts	Stress under proof load Sp; N/ mm^2		
		Vickers hardness		
		Nut state and style		
		Thread pitch (mm)		
		Proof load		
		Chemical composition		
Galvanizing	M20	45µm		
Sizes of tie rod bolts	M20	Bolt length, mm	List	
		Thread length, mm	List	
Bolt head dimensions	Provide Drawing			
Pole nuts dimensions	Provide drawing			
Washers dimensions	Provide drawing			

4.4	Sampling	State
4.5	Quality Management System	State
	Quality Assurance Plan	State
	Copy of ISO 9001:2008 Certificate	State
	Manufacturer's experience	State
	Manufacturing Capacity (units per month)	State
	List of previous customers	State
	Customer reference letters	State
5.1	Test standards and responsibility of carrying out tests	Provide
5.2	Copies of Type Test Reports submitted with tender	Provide
5.3	Type test reports to be submitted with the tender	Provide
5.4	Test reports to be submitted by supplier to KPLC for approval before shipment	Provide
5.5	Acceptance tests to be witnessed by KPLC at factory before shipment	Provide
5.5	Replacement of rejected overhead line fittings	Provide
6.1	Marking	Provide
6.2	Packing	Provide
7.1	Documents submitted with tender	Provide

7.2	Documents to be submitted by supplier to KPLC for approval before manufacture	Provide
8.0	Manufacturer's Guarantee and Warranty	Provide
9.0	List catalogues, brochures, technical data and drawings submitted to support the offer	Provide
10.0	List customer sales records and reference letters submitted to support the offer	Provide
11.0	List Test Certificates submitted with tender	Provide
12.0	List test reports of the bolts, nuts and washers to be submitted to KPLC for approval before shipment	Provide
13.0	Statement of compliance to specification (indicate deviations if any & supporting documents)	Provide

.....

Manufacturer's Name, Signature, Stamp and Date